Semester Final Project: Gear-Box Design

Mechanical Design II (Fall 2025)

MAE 4342-001

Dr Ratan Kumar

Completed by:

Isaac Buck, Dhurba Kc, Matthew Leon, and Nathaniel Cullum

Date Submitted: 12/8/2025

Table of Contents

I. Introduction 3
II. Design Procedure 4
III. Assumptions 6
IV. Calculations 8
V. Drawings 16
VI. Conclusion 17
VII. Summary 18
References 19
VIII. Appendix 20

I. Introduction

The design of a gearbox for an overhead crane hoist is a complex engineering task when designing a safe and efficient lifting operation. This project focuses on developing a three-stage spur gear reduction system, as seen in figure 1, capable of lifting loads up to 7.5 tons at a maximum speed of 30 ft/min, powered by a 15 HP electric motor operating at a speed of 1800 rpm. The gearbox must reduce the input speed while significantly increasing torque to meet operational requirements of the hoist system. Key considerations include gear ratio selection, material properties, fatigue life, and reliability standards. Given rough boundaries of what is expected for the project such as minimum and maximum gear ratios, shaft diameters for 3 of the shafts, expected life usage, and safety factors to adhere to. Applying mechanical design principles and designing a suitable option to perform the task at safe and operational engineering standards, this report outlines the design process, assumptions made, calculations, and final part drawings necessary for an industrial hoist/crane application.

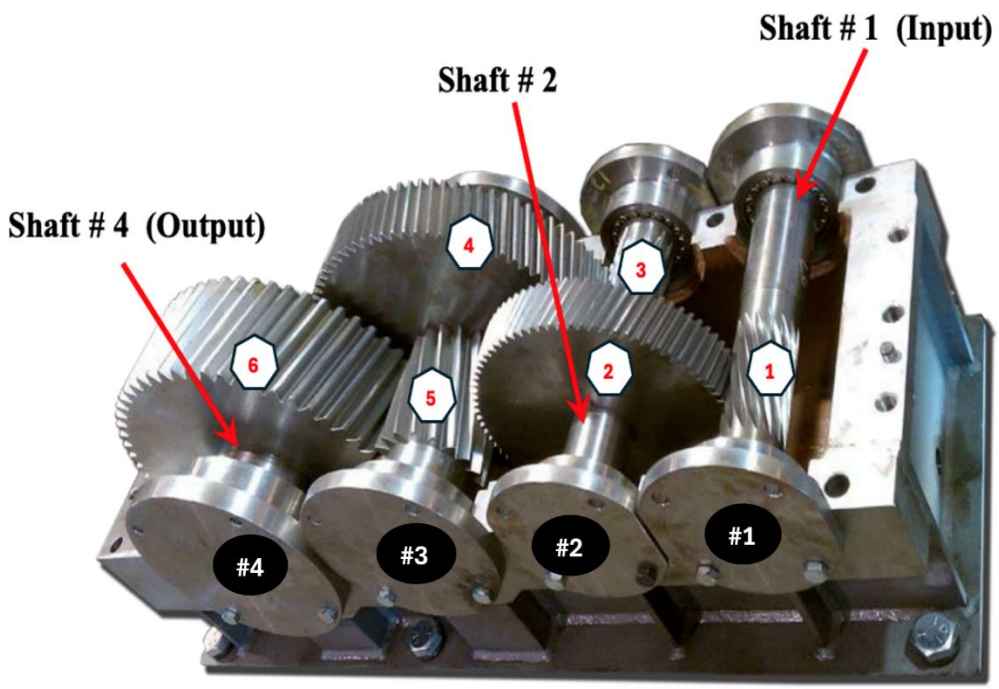

Figure 1 Preliminary 3 Stage Gear-Box Diagram

A good design for an industrial hoist/crane system is not only crucial for a safe warehouse working environment but also will remain cost effective due to a longer life and less required maintenance. Each of these factors reveal a clear need for an effective and reliable gear box system. Companies across America reported an average annual rate of 44 worker deaths per year due to crane misuse and failure [1]. With reported a minimum of 10% of these injuries resulting from malfunction/failure of the crane system. Seeing how high the potential for harm these systems have, it is crucial that they are designed in such a way to minimize failure and thus minimize injury in these industrial environments.

II. Design Procedure

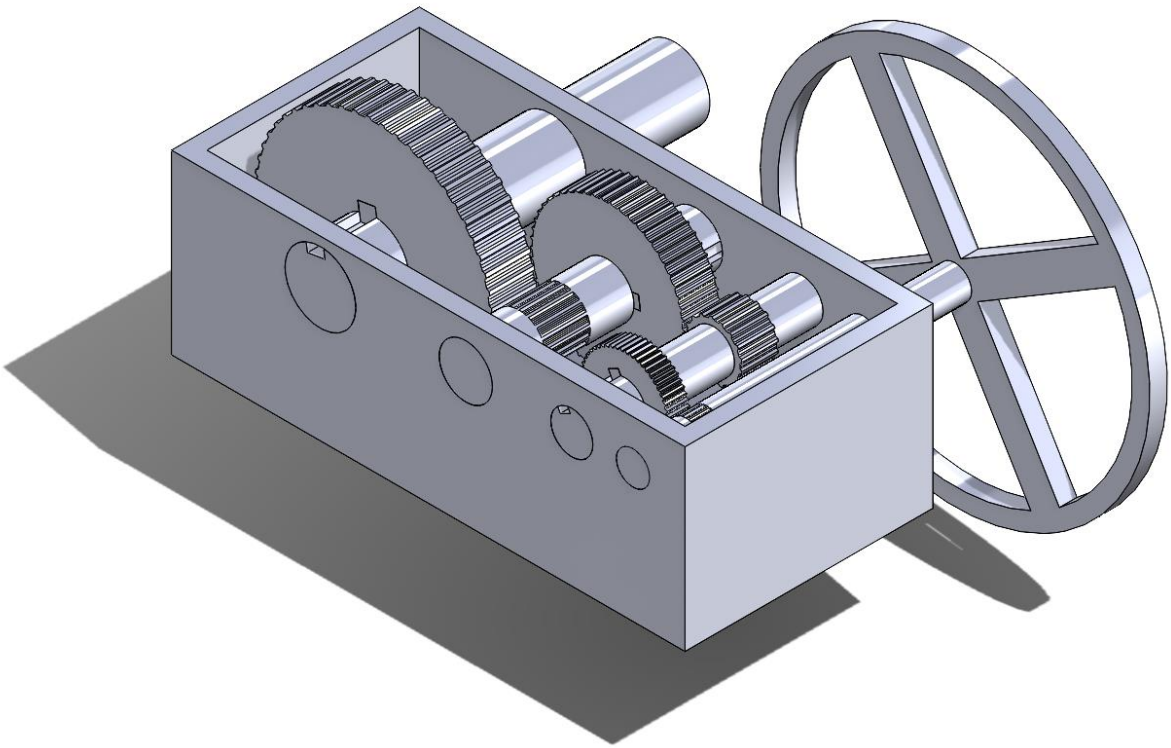

Figure 2. Gear-Box Assembly

The following information was the given design parameters that were used to design the three-stage gear box seen in figure 2. These specifications dictated the process that was followed in the coming sections to design the unknown components.

1. Motor Specifications
    a. 15HP at 1800 rpm
2. Hoist Drum Specifications
    a. Max load of 7.5 Tons
    b. Max speed of 30 ft/min
    c. Pitch Diameter of 12.5”, Nominal Diameter of 10.625”
3. Factor of safety in Fatigue Loading
    a. 1.2 in surface
    b. 1.5 in bending

4. Shaft Diameters
    a. 1: 1.875”
    b. 3: 3”
    c. 4: 4”
5. Gears and Pinions
    a. Pinions machined onto shaft; gears pressed onto shaft with key
    b. Maximum ratio: 10:1, Minimum ratio: 3:1
    c. Pressure angle (∅) = 25°
6. Lubrication
    a. ISO VG 220 gear oil
7. Life
    a. The gearbox will be designed for 10 years at an average use of 5 hour/day, 200 days/year
    b. Designed for infinite life at 90% reliability
8. Weak Link
    a. A weak link key will be installed and designed for the 4th shaft to prevent extreme failure in a worst case scenario.
9. Materials

Shaft 1, 2, 3 and Pinions 1, 3, 5	
MATERIAL	AISI 4140 Heat Treated to 370-410 BHN
Gears 6,4,2	
MATERIAL	AISI 4140 Heat Treated to 325-365 BHN
Shaft 4	
MATERIAL	AISI 4340 Annealed

Designing a gear box has many different areas to consider with the following components needing an in-depth analysis in order to design a safe system that covers every area of the system.

1. Gears and Pinions
    a. Teeth count
    b. Diameter of gears and pinions
2. Shaft
    a. Diameter of second shaft
3. Keys
    a. For Gears on shafts 2, 3 and 4

The process preformed to obtain the main designed components listed above is as follows:

1. Determine material properties for each of the shafts and gears
2. Shaft Analysis
    a. Moment Diagram along shafts
3. Gear Analysis
    a. Face width and diametral pitch boundary

4. Key Analysis
    a. Minimum required lengths for keys attached onto gears with respect to shear, and bearing stress.
    b. Compare to Face width calculations to determine allowable key and gear length.

III. Assumptions

The following set of intuitive engineering assumptions were made in order to complete a full design of the gearbox. For each assumption listed, a description below will explain where in the calculations the assumption was made, and why this needed to be assumed.

Assumption 1: Hardness values of 410 for pinions, and 365 for gears.

Calculations: Finding material properties depends on hardness value.

Reasoning: Reasonable hardness in the range of allowable hardness values.

Assumption 2: Pinions and gears are grade 2 materials.

Calculations: Material Properties depend on grade.

Reasoning: Common grade for gear materials.

Assumption 3: The loading experienced in the drum is ¼ the load rating.

Calculations: Total loading divided by four to get max force acting.

Reasoning: This is an estimation of the load experienced in the drum.

Assumption 4: Diameter of 12.5” on drum is location of force acting.

Calculations: Calculations for torque must use the distance from axis, 12.5”/2 times the force.

Reasoning: This is a good approximation of where the load experienced in the drum.

Assumption 5: Square Key

Calculations: A square key as opposed to a rectangular key will have the same height as width.

Reasoning: Not only is it industry standard to use square keys, but it simplifies the calculations.

Assumption 6: Trimetric Stress factor (k): k=1

Calculations: Used in determining the key length for a

Reasoning: The trimetric stress factor is

Assumption 7: Quality Index of all gears/pinions are greater than or equal to 8

Calculations: This affects the calculation of the velocity correction factor for gear bending stress.

Reasoning: This is a reasonable quality of gear quality to assume to be met.

Assumption 8: Factor of safety of 2.4 for standard keys

Calculations: Using equations for minimum length needed.

Reasoning: This is industry standard FOS for a key component.

Assumption 9: The weak link key is assumed to be AISI 4027 Annealed

Calculations: This only changes the material properties in any calculations.

Reasoning: This is a weaker steel which will allow the key to break before any other components.

IV. Calculations

Note: All references to, equations, figures, and tables in this section are from the class textbook [2].

Material Properties:

Components and their material properties.

Component	Material	Sy, ksi	Sut, ksi	Brinell Hardness	Source
Gears 1-3	AISI 4340 HT to 360 BHN	156	170	360HB	Table A10
Pinions 1-3 Shafts 1-4	AISI 4140 HT to 370-410 BHN	165	181	410HB	Table A-10
Key 3	AISI 4027 Annealed	47	75	N/A	Table A-10

Gear Ratio Requirements:

$$P = \frac{15{,}000}{4}\ \text{lb} = 3750\ \text{lb}$$

$$\omega_{i,max} = 1800\ \text{rpm}$$

$$d_{drum} = 12.5\ \text{in}$$

$$T_o = \frac{P}{(\frac{d_{drum}}{2})} = 23438\ \text{lb in}$$

$$T_i = \frac{(HP)_i}{\omega_i} = 525.21\ \text{lb in}$$

$$m_{G,min} = \frac{T_o}{T_i} \approx 45$$

Final Gear Ratios:

$$m_{G,1} = 3$$

$$m_{G,2} = 3$$

$$m_{G,3} = 5$$

$$m_{G,total} = m_{G,1} \times m_{G,2} \times m_{G,3} = 45$$

Calculation of Shaft 2 Size:

We can use the ASME shaft diameter equation below to calculate the necessary minimum diameter for shaft 2. We must use this equation at both critical points (the gear and the pinion). This is an iterative process that requires the assumption of an initial shaft 2 diameter, d_2.

$$d = \left\{ \frac{32N_f}{\pi} \left[\left(k_f \frac{M_a}{S_f} \right)^2 + \frac{3}{4} \left(\frac{T_m}{S_y} \right)^2 \right]^{\frac{1}{2}} \right\}^{\frac{1}{3}}$$

p_d Calculation:

$$d_p = \frac{N_p \times D_{shaft}}{N_p + 2}$$

$$p_d = \frac{N_p}{d_p}$$

W_t Calculation:

$$W_t = \frac{T_{input}}{d_p}$$

M_a Calculation:

Using singularity functions, we can create expressions for the loading, shear, and bending moments in the shaft. This relies on modeling the loading from the gears as point loading and defined points along the shaft.

$$q(x) = R_1 < x >^{-1} - W_{r1} < x - a >^{-1} - W_{r2} < x - b >^{-1} + R_3 < x - L >^{-1}$$

$$v(x) = R_1 < x >^{0} - W_{r1} < x - a >^{0} - W_{r2} < x - b >^{0} + R_3 < x - L >^{0}$$

$$M(x) = R_1 < x >^{1} - W_{r1} < x - a >^{1} - W_{r2} < x - b >^{1} + R_3 < x - L >^{1}$$

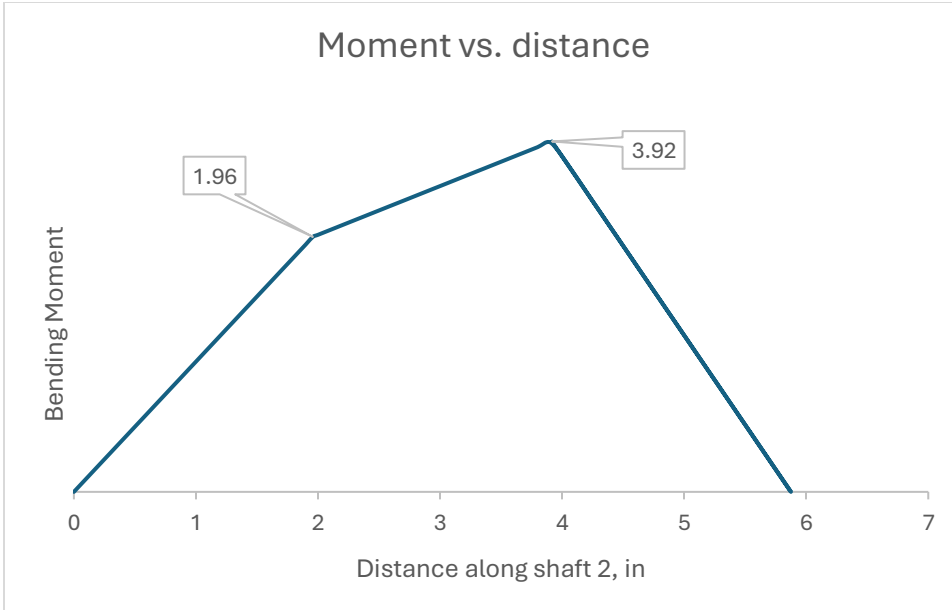

We can then find that the max of M(x) occurs at point b, the location of the pinion. The other critical point, point a, is the location of the gear. We can then find the moment at a and b. To do this, we need to find Wr1 (the radial force input from shaft 1 at the gear of shaft 2), Wr2 (The radial force out of shaft 2 at the pinion) and the two reaction forces, R1 and R2.

$$W_{t1} = \frac{T_i}{(\frac{d_{p1}}{2})} = 560 \text{ lb}$$

$$W_{r1} = W_{t1} \tan \varphi = 292 \text{ lb}$$

Using the ratio of radii from the gear on shaft two to the pinion on shaft two, we can calculate the forces on the pinion using the conservation of torque within shaft 2.

$$W_{t2} = W_{t1}\left(\frac{d_{g1}}{d_{p2}}\right)$$

$$d_{g1} = m_{g1} d_{p1}$$

$$d_{p2} = \frac{N_{p2} \times d_2}{N_{p2} + 2}$$

$$W_{r2} = W_{t2} \tan \varphi$$

Now that we can calculate the radial force for each diameter of shaft 2, we can calculate the reacting forces based on our diagram.

$$R_2 = \frac{aW_{r1} + bW_{r2}}{L}$$

$$R_1 = W_{r1} + W_{r1} - R_2$$

We can then plug in these equations for M(a) and M(b). Because Wr2, R1, and R2 is a function of shaft 2 diameter, M(x) must be recalculated for each step.

T_m Calculation:

We can use our input force to shaft 2 along with gear geometry to calculate the applied Torque.

$$T_m = W_{t1} * \frac{d_{g1}}{2} = 1575 \text{ lb in}$$

k_f Calculation:

We must calculate k_f for both the stress concentration at the pinion and the stress concentration at the gear.

$$k_f = 1 + q(k_t - 1)$$

$$q = \frac{1}{1 + \frac{\sqrt{a}}{\sqrt{r}}}$$

From table 6-6 we can find the Neuber constant. We can assume r to be 0.02 for both the keyway and the radius of the notch in which the pinion will be machined. Using this, we can get a value for q.

$$\sqrt{a} = 0.018$$

$$r = 0.02$$

$$q = 0.887$$

Gear $k_{f,g}$ Calculation:

According to figure 10-16, we can assume a static stress concentration factor of around 2.2. Using this, we can calculate the dynamic stress factor.

$$k_{t,g} = 2.2$$

$$k_{f,g} = 2.07$$

Pinion $k_{f,p}$ Calculation:

We can assume this to be 1, as we will look at the loading of the pinion specifically to determine allowable stresses within the pinion.

S_f Calculation:

We can use equation 6.6 to find the fatigue strength correction factors. These are functions of the shaft diameter, so they must be iterated with each iterated solution for d_2.

$$S_f = C_{load}\, C_{size}\, C_{surf}\, C_{temp}\, C_{reliab}\, S_{f'}$$

From equation 6.7a

$$C_{load} = 1$$

From equation 6.7b

$$C_{size} = 0.869(d)^{-0.097}$$

From equation 6.7e

$$C_{surf} = 16.841(S_{ut})^{-0.265}$$

From equation 6.7f

$$C_{temp} = 1$$

From Table 6-4

$$C_{reliab} = 0.897$$

<u>Iterative Solution of minimum d_2.</u>

Now that we have all the necessary information to solve for the diameter, we can iterate solutions starting with an initial diameter of 1 in. We see a convergence at a diameter of 0.939 in.

Iteration #	1	2	3	4	5	6		
Input diameter d_2, in	1.000	0.925	0.943	0.938	0.940	0.939		
Moment M_a at Pinion, lb in	881	921	911	914	913	0.913		
Moment M_a at Gear, lb in		1190	1271	1250	1256	1254	1255	
S_f, ksi	48.03	48.40	48.31	48.33	48.32	48.33		
Safety factor at pinion	3.76			2.82	4.03	2.97	2.99	2.98
Safety factor at gear	1.89			1.42	1.52	1.49	1.50	1.50
Calculated diameter d_2 at pinion, in	0.736	0.749	0.746	0.747	0.747	0.747		
Calculated diameter d_2 at gear, in	0.925			0.943	0.938	0.940	0.939	0.939

Shaft two must have at least a minimum diameter of 0.939 in.

Calculations for Gear/Pinion Bending Stress:

$$\sigma_b = \frac{W_t\, p_d}{FJ} \frac{K_a K_m}{K_v} K_s K_B K_I$$

AGMA Bending Stress equation (Insert reference to textbook)

Consistent for each gear:

$K_a = 1$ (uniform loading from electric drive, textbook table 12-17)

$K_s = 1$ (assumption given normal sizing, textbook chapter 12-8)

$K_B = 1$ (Solid-disk gear, textbook chapter 12-8)

$K_I = 1$ (No idler gears, textbook chapter 12-8)

Potentially different for each gear and pinion:

K_m, K_v, F, J, p_d, W_t

F Calculation (Section 12-8)

$$F = \frac{12}{p_d}$$

K_m Calculation (Table 12-16):

$$K_m = 1.6 \text{ if F} < 2$$

$$K_m = 1.6 + 0.1\frac{(F-2)}{6} \text{ if } 2 < \text{F} < 6$$

K_v Calculation (eq. 12.16a):

$$K_v = \left(\frac{A}{A + \sqrt{V_t}}\right)^B$$

A Calculation (eq. 12.17a):

$$A = 50 + 56(1 - B)$$

B Calculation (12.17b):

$$B = \frac{(12 - Q_v)^{2/3}}{4}$$

J Calculation (Table 12-13):

Interpolation was performed for each gear ratio using the following table.

Table 12-13 AGMA Bending Geometry Factor J for 25°, Full-Depth Teeth with HPSTC Loading

Gear teeth	Pinion teeth 12 P	12 G	14 P	14 G	17 P	17 G	21 P	21 G	26 P	26 G	35 P	35 G	55 P	55 G	135 P	135 G
12	U	U														
14	U	U	0.33	0.33												
17	U	U	0.33	0.36	0.36	0.36										
21	U	U	0.33	0.39	0.36	0.39	0.39	0.39								
26	U	U	0.33	0.41	0.37	0.42	0.40	0.42	0.43	0.43						
35	U	U	0.34	0.44	0.37	0.45	0.40	0.45	0.43	0.46	0.46	0.46				
55	U	U	0.34	0.47	0.38	0.48	0.41	0.49	0.44	0.49	0.47	0.50	0.51	0.51		
135	U	U	0.35	0.51	0.38	0.52	0.42	0.53	0.45	0.53	0.48	0.54	0.53	0.56	0.57	0.57

<u>Calculations for Gear/Pinion Surface Stress:</u>

$$\sigma_c = C_p \sqrt{\frac{W_t}{F I d} \frac{C_a C_m}{C_v} C_s C_f}$$

Buckingham Equation (Eq. 12.21)

Ca, Cm, Cv, and Cs are equal, respectively, to Ka, Km, Kv, and Ks

C_p Calculation (Table 12-18):

$$C_p = 2300$$

I Calculation (Approximation formula):

$$I = \frac{\sin\varphi \cos\varphi}{2}\left(\frac{N_g}{N_g + N_p}\right)$$

C_f Calculation (Ch 12-8)

$$C_f = 1$$

Surface Fatigue Strength Calculation (Equation 12.25)

$$S_{fc} = \frac{C_L C_H}{C_T C_R} S_{fc'}$$

$S_{fb'}$ Calculation (Figure 12-25 Grade 2):

$$S_{fb'} = 102\ HB + 16400$$

C_L Calculation (Figure 12-26):

$$C_L = 1$$

C_R C_T Calculation

$$C_R = C_T = 1$$

C_H Calculation (equation 12.26b)

$$C_H = 1$$

<u>Bending Stress and Surface Stress Factor of Safety calculation:</u>

Now that we have laid out how to calculate the Bending and Surface Stresses along with their endurance limits, we can now design appropriate gear sizes to achieve the desired safety factors of 1.5 for bending stress and 1.2 for contact stress. These are the parameters that we adjusted to get appropriate stress levels: shaft two diameter d_2, face width F. Initially, we set $F = \frac{12}{p_d}$ and $d_2 = 0.939$. These were iterated through a guess and check system to find appropriate values for each variable. No other parameters (such as gear ratios or materials) had to be changed.

<u>Final Gear and Pinion Design:</u>

	d_p (in)	p_d (in)$^{-1}$	N	F (in)
Pinion 1	1.679	10.133	17	1.184
Pinion 2	2.125	8.000	17	1.500
Pinion 3	2.684	6.333	17	2.526
Gear 1	5.033	10.133	51	1.184
Gear 2	8.723	8.000	51	1.500
Gear 3	13.421	6.333	85	2.526

<u>Final Shaft 2 Design:</u>

d_p *(in)*	2.375

<u>Stress Analysis Validating Pinion, Gear, and Shaft 2 Design.</u>

	Bending Stress (Psi)	Contact Stress (Psi)	SF (Bending)	SF (Contact)
Pinion 1	27855	151430	2.48	1.89
Pinion 2	15360	112450	1.37	1.37
Pinion 3	41326	174990	1.67	1.42
Gear 1	21384	87430	2.97	4.73
Gear 2	12314	64924	2.06	3.43
Gear 3	31725	78256	2.01	5.91

Key Design:

The design for each of the keys used to attach the gears onto each shaft follows a standard approach. Firstly, using Table 10-2 to select the key width/height for a square key of the known diameter of each shaft.

Table 10-2 Standard Key and Setscrew Sizes for US and Metric Sized Shafts

Shaft Diameter (in)	Nominal Key Width (in)	Setscrew Dia. (in)	Shaft Diameter (mm)	Key Width x Height (mm)
$0.312 < d \leq 0.437$	0.093	#10	$8 < d \leq 10$	3 x 3
$0.437 < d \leq 0.562$	0.125	#10	$10 < d \leq 12$	4 x 4
$0.562 < d \leq 0.875$	0.187	0.250	$12 < d \leq 17$	5 x 5
$0.875 < d \leq 1.250$	0.250	0.312	$17 < d \leq 22$	6 x 6
$1.250 < d \leq 1.375$	0.312	0.375	$22 < d \leq 30$	8 x 7
$1.375 < d \leq 1.750$	0.375	0.375	$30 < d \leq 38$	10 x 8
$1.750 < d \leq 2.250$	0.500	0.500	$38 < d \leq 44$	12 x 8
$2.250 < d \leq 2.750$	0.625	0.500	$44 < d \leq 50$	14 x 9
$2.750 < d \leq 3.250$	0.750	0.625	$50 < d \leq 58$	16 x 10
$3.250 < d \leq 3.750$	0.875	0.750	$58 < d \leq 65$	18 x 11
$3.750 < d \leq 4.500$	1.000	0.750	$65 < d \leq 75$	20 x 12
$4.500 < d \leq 5.500$	1.250	0.875	$75 < d \leq 85$	22 x 14
$5.500 < d \leq 6.500$	1.500	1.000	$85 < d \leq 95$	25 x 14

Figure 4. Table 10-2

Key on Gear	Width (in)
# 1	**0.625**
# 2	**0.75**
# 3	**1**

Then using the following formulas, the minimum lengths can be calculated for each key to support a known torque for both shear stress and bearing stress. With the subscript "s" being the shear, and "b" being the bearing stress.

$$L_s = \frac{4TN_{fs}}{S_{yt}DW}$$

$$L_b = \frac{4TN_{fs}}{KS_{yc}DH}$$

Since it has been assumed that the trimetric stress factor (k) is equal to one, and the yield strength of the ductile materials is equal in compressive and tensile loadings, the shear and bending stress minimum lengths are equal. The table below shows the minimum lengths needed for each key.

Key on Gear	Torque (lb*in)	Length (in)
# 1	1575	**0.362**
# 2	4725	**0.717**
# 3	23625	**0.758**

Using the previously calculated values for the face width of the gears, the keys are designed at a much higher length giving the safety factors seen below. With the key attaching to the third gear having a safety factor of 1.305 which will allow it to act as a weak link and break before the prior mentioned components.

Key on Gear	Length (in)	Safety Factor
# 1	1.184	**7.847**
# 2	2.053	**6.874**
# 3	1	**1.305**

V. Drawings

Shaft 1 (1/8)

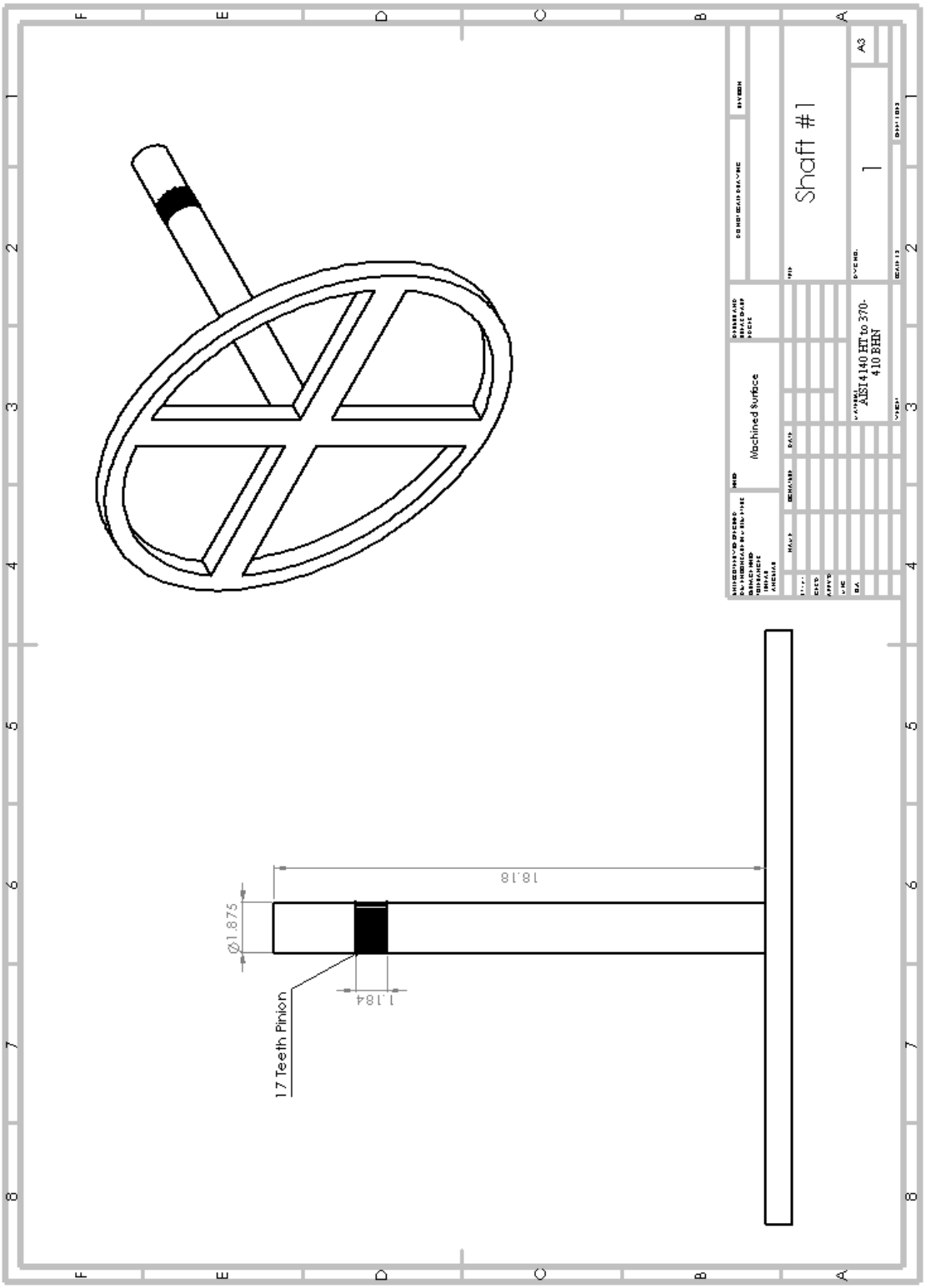

Shaft 2 (2/8)

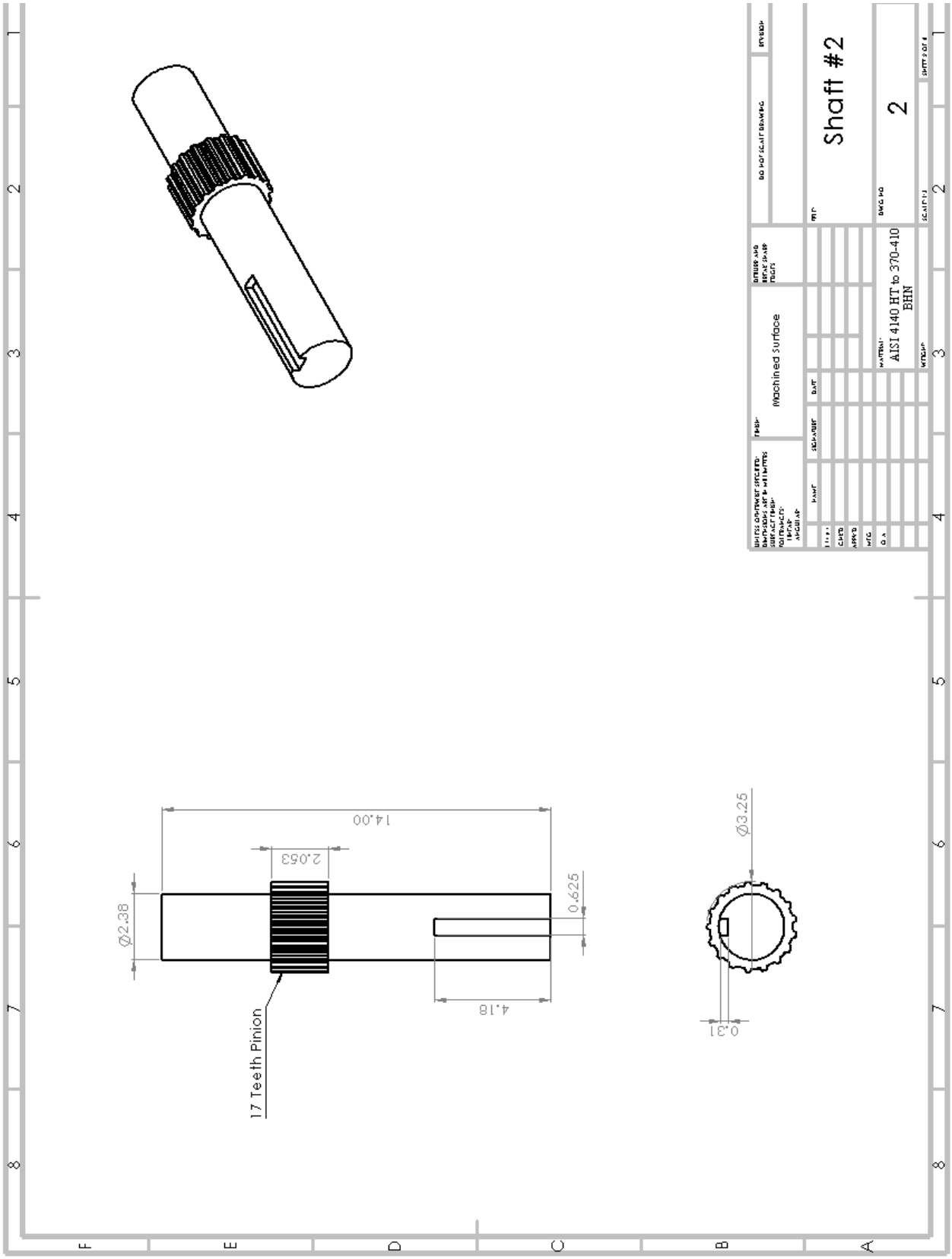
Shaft #2
2
AISI 4140 HT to 370-410 BHN
Machined Surface
14.00
2.053
Ø2.38
0.625
4.18
17 Teeth Pinion
Ø3.25
0.31

Shaft 3 (3/8)

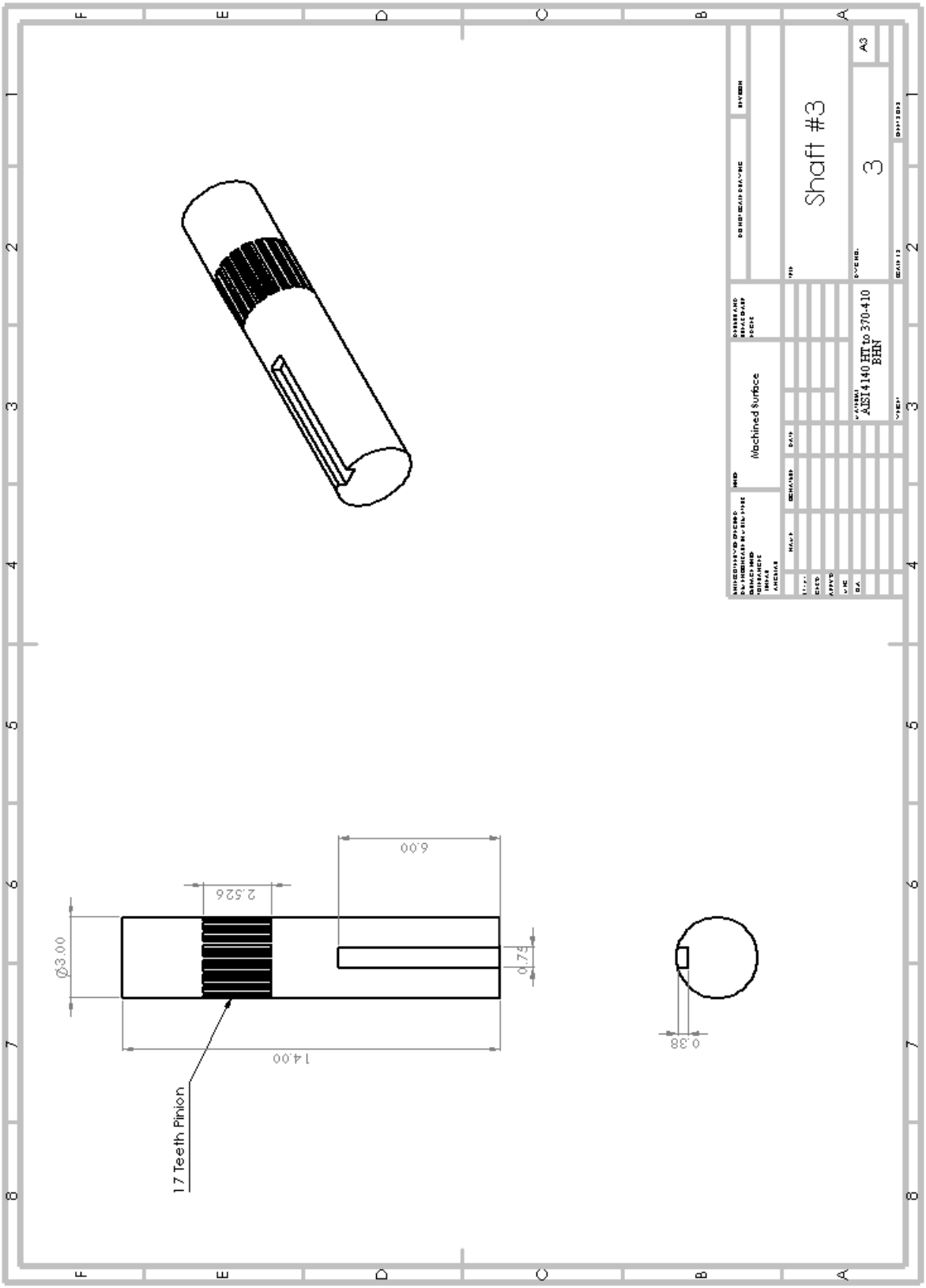
Shaft #3
3
A3
Machined Surface
AISI 4140 HT to 370-410 BHN
Ø3.00
2.526
6.00
0.75
14.00
0.38
17 Teeth Pinion

Shaft 4 (4/8)

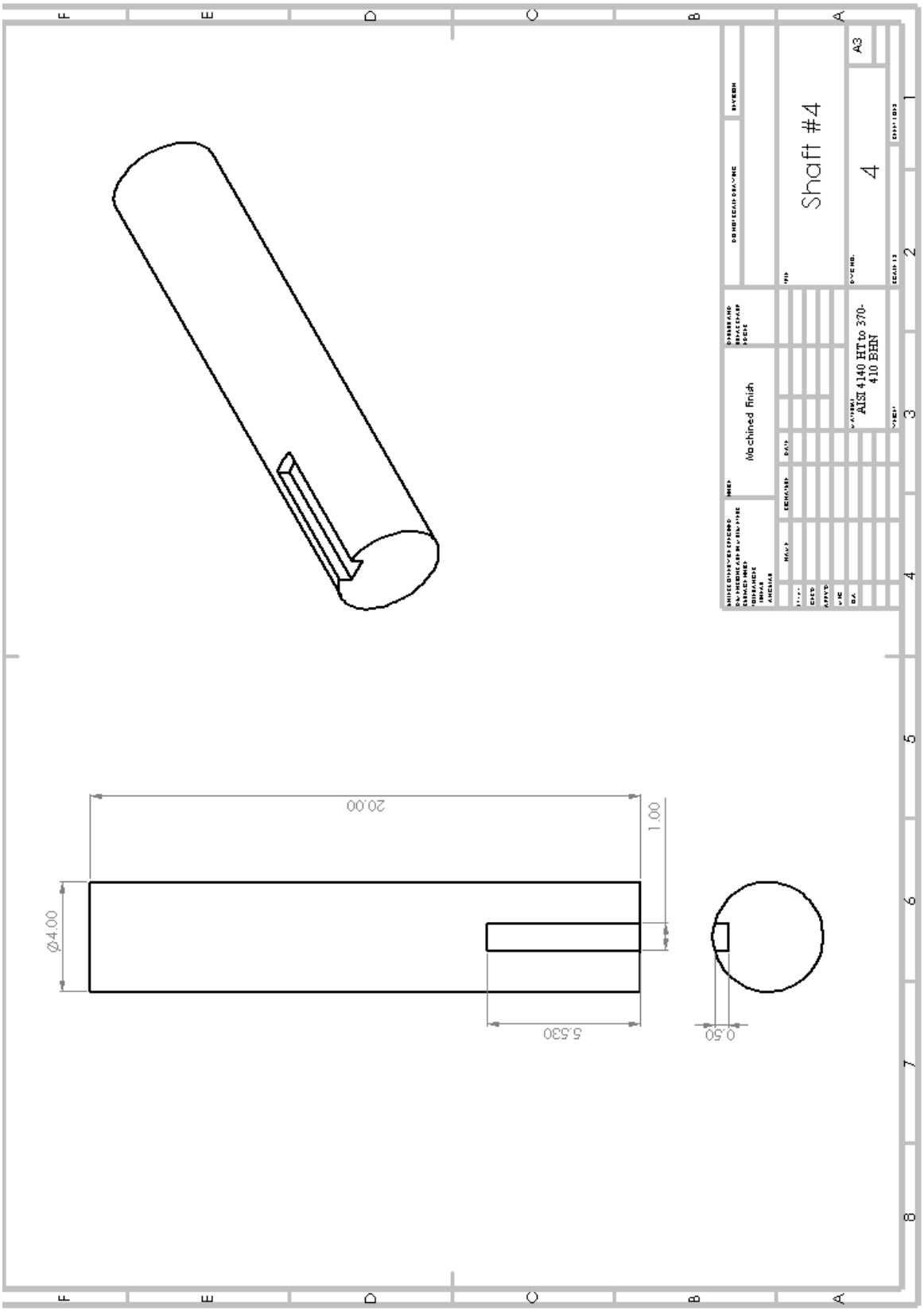
Shaft #4
4
A3
AISI 4140 HT to 370-410 BHN
Machined finish
20.00
1.00
Ø4.00
5.530
0.50

Gear 1 (5/8)

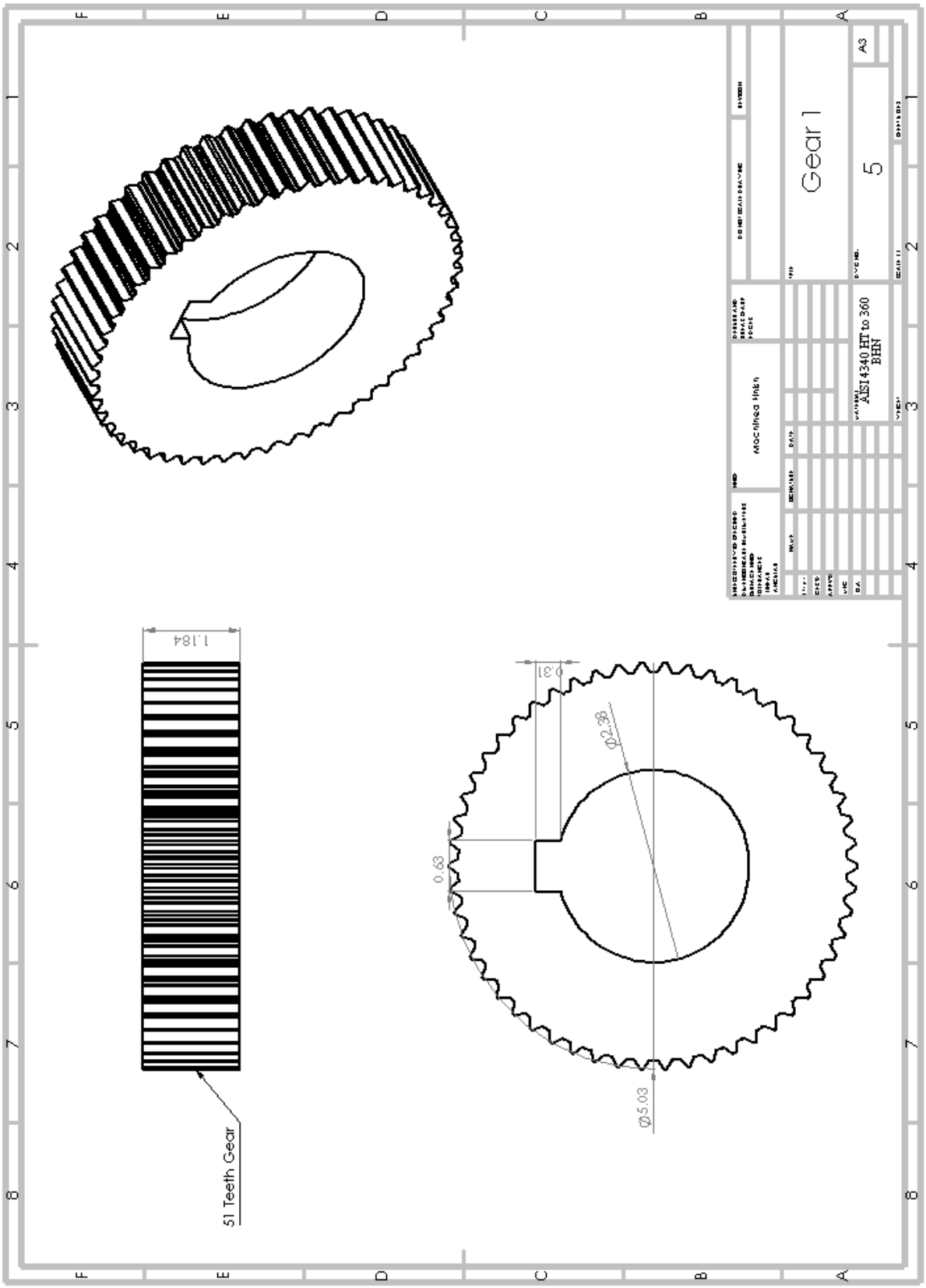
Gear 1
5
A3
AISI 4340 HT to 360 BHN
Machined Hub
1.184
51 Teeth Gear
0.31
Ø2.38
0.63
Ø5.03

Gear 2 (6/8)

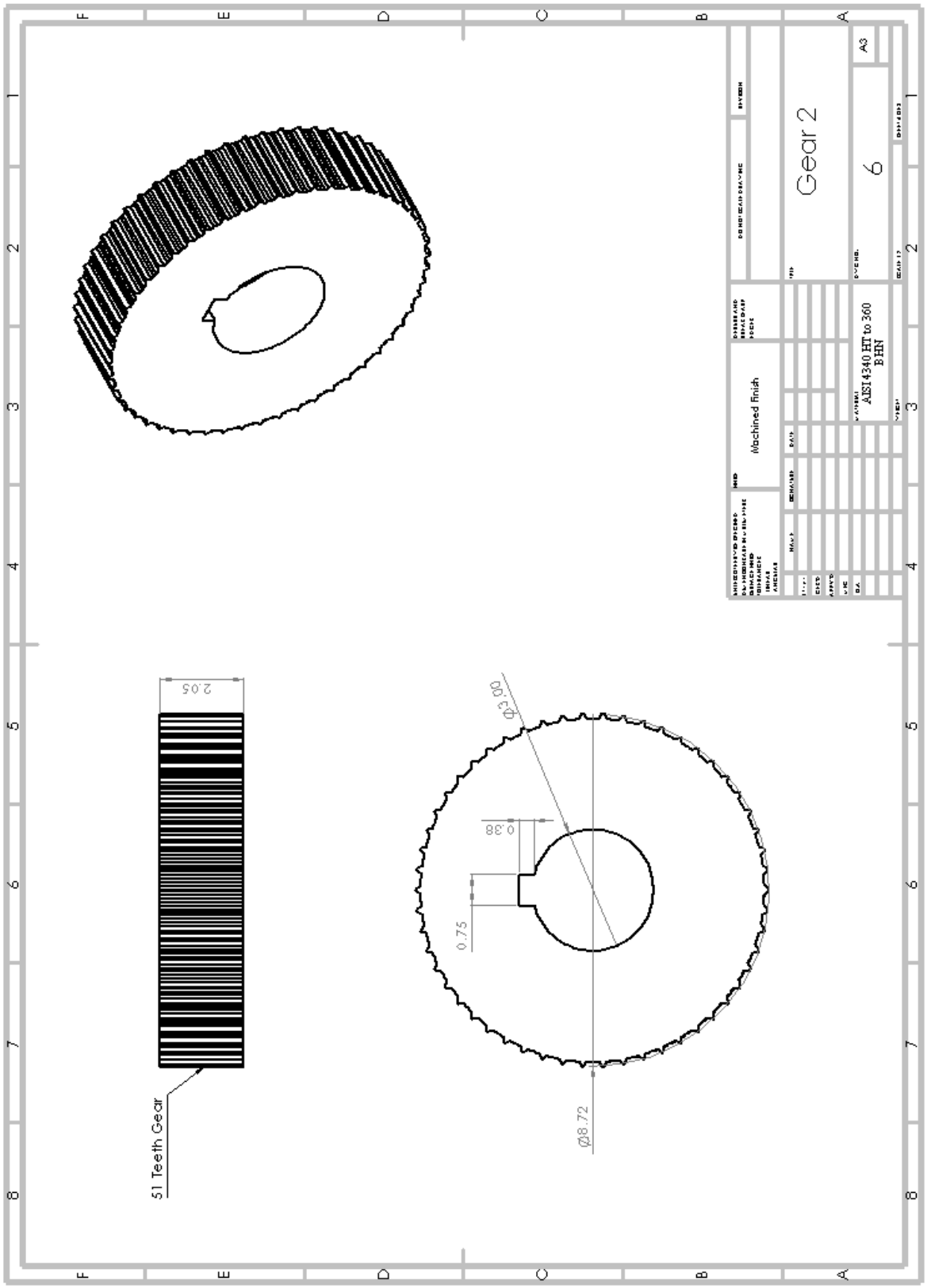
Gear 2
6
A3
AISI 4340 HT to 360 BHN
Machined finish
51 Teeth Gear
2.05
Ø3.00
0.38
0.75
Ø8.72

Gear 3 (7/8)

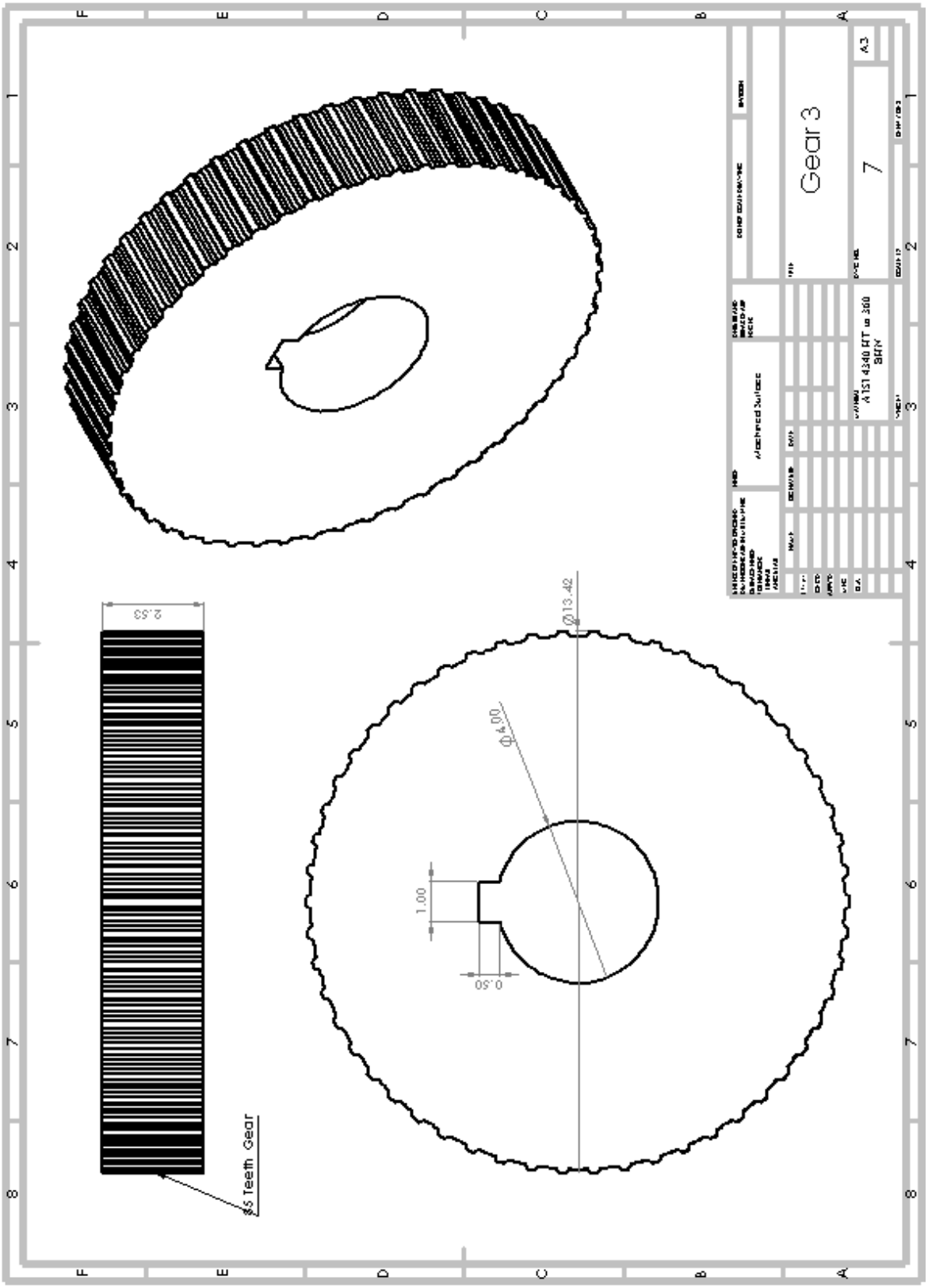
Gear 3
7
A3
A151 4340 HT to 300 BHN
Machined Surface
2.53
Ø13.42
Ø4.00
1.00
0.50
35 Teeth Gear

Gear-Box Housing (8/8)

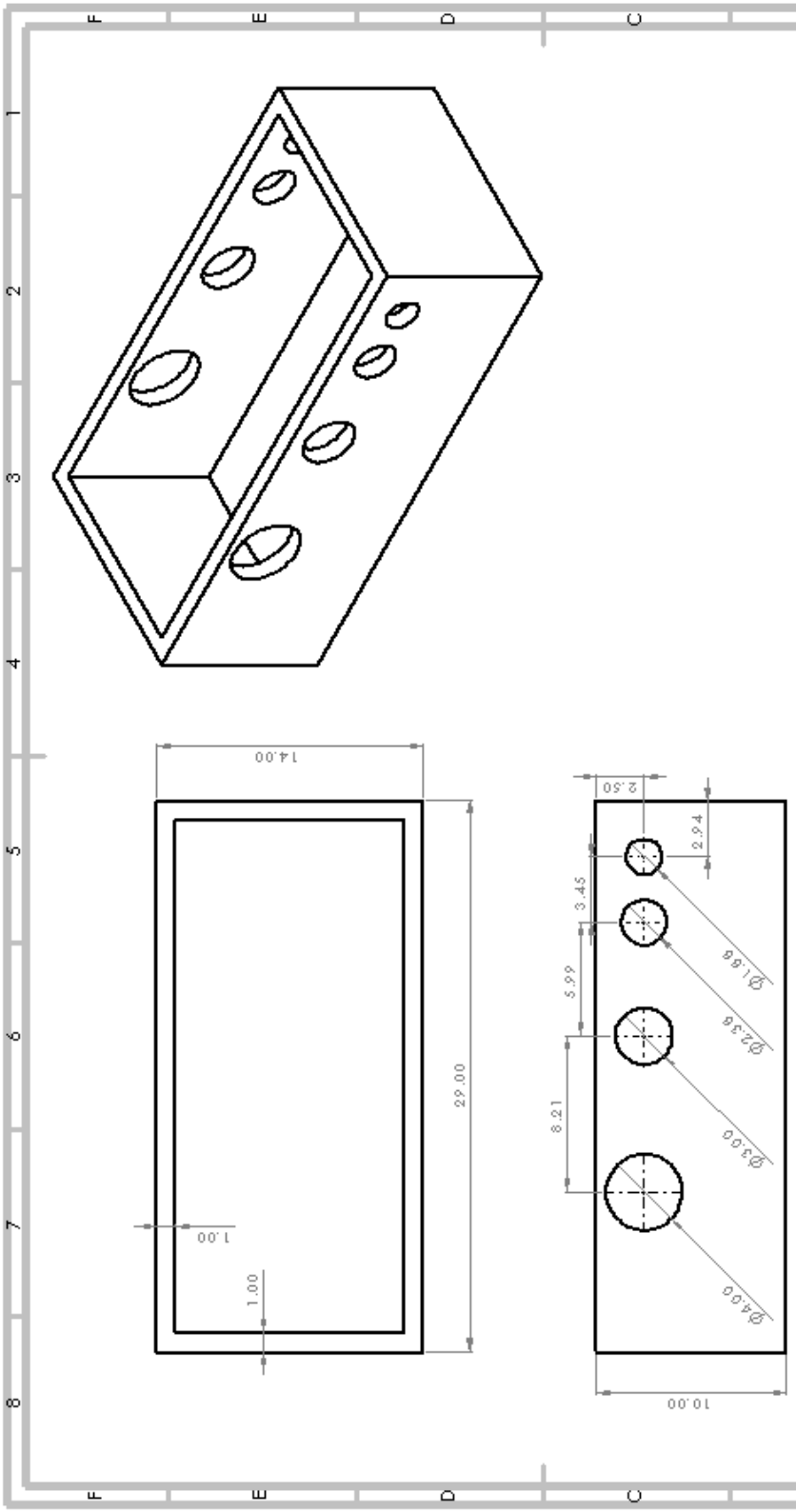

VI. Conclusion

In this project we designed a three-stage spur gear reducer capable of meeting all the requirements for the overhead crane hoisting system. Based on the motor input, load conditions, and life expectations, each component – every gear, shaft # 2, pinion, and the output shaft key was sized and checked to safely handle the required torque and speed reduction. The materials, gear geometry, and shaft dimensions were chosen to provide reliable performance under both bending and surface stresses, while also meeting the fatigue and reliability requirements.

The final design allows the hoist to lift a 7.5 - ton load at the required speed and keeps all components operating within safe limits. The output-shaft key was intentionally designed as the weak link so that, in the event of overload, it will fail first and protect more critical parts of gearbox. Overall, the design meets the requirements, functional goals, follows good mechanical engineering practices, and provides a strong and dependable gearbox solution.

VII. Summary

Shaft #2 Design Parameters

d = 2.375 in

Pinion Design Parameters

	Pinion 1	Pinion 2	Pinion 3
Number of Teeth (N_g)	17	17	17
Diametral Pitch (p_d)	10.133 inches^{-1}	8 inches^{-1}	6.33 inches^{-1}
Pitch Diameter (d_p)	1.678 inches	2.125 inches	2.684 inches
Face Width (F)	1.18 inches	2.05 inches	2.52 inches
Bending Stress (σ_b)	27855 Psi	38488 Psi	41326 Psi
Contact Stress (σ_c)	151430 Psi	178000 Psi	174990 Psi
SF bending (N_b)	2.48	1.80	1.67
SF contact (N_c)	1.89	1.37	1.42

Gear Design Parameters

	Gear 1	Gear 2	Gear 3
Number of Teeth (N_g)	51	51	85
Diametral Pitch (p_d)	10.13 inches^{-1}	8 inches^{-1}	6.33 inches^{-1}
Pitch Diameter (d_g)	5.03 inches	8.72 inches	13.42 inches
Face Width (F)	1.18 inches	2.05 inches	2.52 inches
Bending Stress (σ_b)	22331 Psi	30856 Psi	31725 Psi
Contact Stress (σ_c)	87430 Psi	102770 Psi	78256 Psi
SF bending (N_b)	2.97	2.06	2.00
SF contact (N_c)	4.37	3.43	5.90

Key on Shaft #4:

Key	Torque (lb*in)	Cross-Section Shape	Cross-Section Width (in)	Length (in)	Factor of Safety
Shaft # 4	23625	Square	1	1	1.305

References

[1] "Crane Accidents: Facts and Statistics." *Www.blockotoole.com*, www.blockotoole.com/ny-construction-accidents/crane-accidents-facts-and-statistics/.

[2] Norton, Robert L. *Machine Design: An Integrated Approach*. Pearson, 2020.

Appendix

Copy of MATLAB code used to calculate safety factors against surface compression and gear bending for each gear reduction:

```
% Motor torque
motor_power = 15;        % hp
motor_speed = 1800;      % rpm
torque_input=(motor_power*6600)/(motor_speed*2*pi/60);  % in-lb
W=(7.5*2000)/4;
torque_output=(W*6.25);

G=torque_output/torque_input;

phi = 25;                % pressure angle
N  = 1e7;                % Life Cycle

HBp = 410;
%Bending Fatigue Strength for Pinion
sfb_prime_pinion = 102 * HBp + 16400;
Kr = 0.85;
Kt = 1;
Kl_b_1 = 1.3558 * N^(-0.0178);
Kl_b_2 = 1.6831 * N^(-0.0323);
Kl_b   = (Kl_b_1 + Kl_b_2)/2;
sfb_pinion=(sfb_prime_pinion* Kl_b)/(Kr*Kt);
%Surface Fatigue Strength for Pinion
sfc_prime_pinion = 349 * HBp + 34300;
Kl_s_1 = 1.4488 * N^(-0.023);
Kl_s_2 = 2.466  * N^(-0.056);
Kl_s   = (Kl_s_1 + Kl_s_2)/2;
sfc_pinion =(sfc_prime_pinion*Kl_s)/(Kr*Kt);
%
HBg_1 = 365;
%Bending Fatigue Strength for Gear
sfb_prime_gear = 102 * HBg_1 + 16400;
sfb_gear=(sfb_prime_gear*Kl_b)/(Kr*Kt);
%Surface Fatigue Strength for Gear
sfc_prime_gear = 349 * HBg_1 + 34300;
sfc_gear=(sfc_prime_gear*Kl_s)/(Kr*Kt);

%% Stage 1
Np_1 = 17;                          %1st stage Pinion teeth
stage_1_ratio = 3;                  %1st stage ratio
Ng_1 = Np_1 * stage_1_ratio;        %1st stage Gear Teeth

OD = 1.875;                         % in, given outside diameter
dp_1 = (Np_1 * OD) / (Np_1 + 2)    % pitch diameter pinion
pd_1 = Np_1 / dp_1                  % diametral pitch
face_width_1 = 12 / pd_1          % face width
dg_1 = Ng_1 / pd_1                  % pitch diameter gear
%Table 12-13
Jp_1 = 0.38;
Jg_1 = 0.474;   %interpolation
```

```
%Factors
Ka = 1;      % application
Ks = 1;      % size factor
Kb = 1;      % rim factor
if(face_width_1<2)  % load factor
   Km_1 = 1.6;
else
   Km_1 = 1.6 + (face_width_1-2)*0.1/4;
end
% Pitch-line speed at pinion
Vt_1 = (dp_1/(2*12)) * (motor_speed * 2*pi);  % ft/min
Qv = 8;
B = (12 - Qv)^(2/3) / 4;
A = 50 + 56*(1 - B);
Kv_1 = (A/(A + sqrt(Vt_1)))^B; %Dynamic Factor
% Tangential load (same for pinion and gear)
Wt_1 = torque_input / (dp_1/2);      % lb
% Bending - pinion 1
KI_1 = 1;
bending_stress_pinion_1=(Wt_1*pd_1*Ka*Km_1*Ks*Kb*KI_1)/(face_width_1*Jp_1*Kv_1)
SF_b_pinion_1=sfb_pinion/bending_stress_pinion_1
% Contact - pinion 1
Ca = Ka;
Cs = Ks;
Cm_1 = Km_1;
Cv_1 = Kv_1;
I_1 = (sind(phi)*cosd(phi)/2) * (Ng_1/(Ng_1+Np_1));
Cp = 2300;
Cf = 1;
surface_stress_pinion_1 = Cp*sqrt((Wt_1*Ca*Cm_1*Cs*Cf)/(face_width_1*I_1*dp_1*Cv_1))
SF_c_pinion_1 =(sfc_pinion/surface_stress_pinion_1)^2
% Bending - gear 1
KI_g_1 = 1;
Wt_g_1 = Wt_1;
Kv_g_1 = Kv_1;
bending_stress_gear_1=(Wt_g_1*pd_1*Ka*Km_1*Ks*Kb*KI_g_1)/(face_width_1*Jg_1*Kv_g_1)
SF_b_gear_1 =sfb_gear/bending_stress_gear_1
% Contact - gear 1
surface_stress_gear_1 = Cp*sqrt((Wt_g_1*Ca*Cm_1*Cs*Cf)/(face_width_1*I_1*dg_1*Cv_1))
SF_c_gear_1 = (sfc_gear / surface_stress_gear_1)^2

%% Stage 2
Np_2 = 17;                           %2st stage Pinion teeth
stage_2_ratio = 3;                   %2st stage ratio
Ng_2 = Np_2 * stage_2_ratio;         %2st stage Gear Teeth
stage_2_torque= torque_input*stage_1_ratio;
stage_2_speed = 1800/stage_1_ratio;

OD_2 = 2.375;                          % in, outside diameter calculated from shaft
equation
dp_2 = (Np_2 * OD_2) / (Np_2 + 2)     % pitch diameter pinion
pd_2 = Np_2 / dp_2                 % diametral pitch
face_width_2 = 12 / pd_2           % face width
dg_2 = Ng_2 / pd_2                  % pitch diameter gear
%Table 12-13
```

```
Jp_2 = 0.38;
Jg_2 = 0.474;   %interpolation
%Factors
Ka = 1;      % application
Ks = 1;      % size factor
Kb = 1;      % rim factor
if(face_width_2<2)  % load factor
   Km_2 = 1.6;
else
   Km_2 = 1.6 + (face_width_2-2)*0.1/4;
end
% Pitch-line speed at pinion
Vt_2 = (dp_2/(2*12)) * (stage_2_speed * 2*pi);  % ft/min
Qv = 8;
B = (12 - Qv)^(2/3) / 4;
A = 50 + 56*(1 - B);
Kv_2 = (A/(A + sqrt(Vt_2)))^B; %Dynamic Factor
% Tangential load (same for pinion and gear)
Wt_2 = stage_2_torque / (dp_2/2);      % lb
% Bending - pinion 1
KI_2 = 1;
bending_stress_pinion_2=(Wt_2*pd_2*Ka*Km_2*Ks*Kb*KI_2)/(face_width_2*Jp_2*Kv_2)
SF_b_pinion_2=sfb_pinion/bending_stress_pinion_2
% Contact - pinion 1
Ca = Ka;
Cs = Ks;
Cm_2 = Km_2;
Cv_2 = Kv_2;
I_2 = (sind(phi)*cosd(phi)/2) * (Ng_2/(Ng_2+Np_2));
surface_stress_pinion_2 = Cp*sqrt((Wt_2*Ca*Cm_2*Cs*Cf)/(face_width_2*I_2*dp_2*Cv_2))
SF_c_pinion_2 =(sfc_pinion/surface_stress_pinion_2)^2
% Bending - gear 1
KI_g_2 = 1;
Wt_g_2 = Wt_2;
Vt_g_2 = Vt_2;
Kv_g_2 = Kv_2;
bending_stress_gear_2=(Wt_g_2*pd_2*Ka*Km_2*Ks*Kb*KI_g_2)/(face_width_2*Jg_2*Kv_g_2)
SF_b_gear_2 =sfb_gear/bending_stress_gear_2
% Contact - gear 1
surface_stress_gear_2 = Cp*sqrt((Wt_g_2*Ca*Cm_2*Cs*Cf)/(face_width_2*I_2*dg_2*Cv_2))
SF_c_gear_2 = (sfc_gear / surface_stress_gear_2)^2

%% Stage 3
Np_3 = 17;                            %3st stage Pinion teeth
stage_3_ratio = 5;                    %3st stage ratio
Ng_3 = Np_3 * stage_3_ratio;          %3st stage Gear Teeth
stage_3_torque= stage_2_torque*stage_2_ratio;
stage_3_speed = stage_2_speed/stage_2_ratio;

OD_3 = 3;                           % in, outside diameter given
dp_3 = (Np_3 * OD_3) / (Np_3 + 2)     % pitch diameter pinion
pd_3 = Np_3 / dp_3                   % diametral pitch
face_width_3 = 16 / pd_3             % face width
dg_3 = Ng_3 / pd_3                   % pitch diameter gear
%Table 12-13
```

```
Jp_3 = 0.38;
Jg_3 = 0.495;   %interpolation
%Factors
Ka = 1;      % application
Ks = 1;      % size factor
Kb = 1;      % rim factor
if(face_width_3<2)  % load factor
   Km_3 = 1.6;
else
   Km_3 = 1.6 + (face_width_3-2)*0.1/4;
end
% Pitch-line speed at pinion
Vt_3 = (dp_3/(2*12)) * (stage_3_speed * 2*pi);  % ft/min
Qv = 8;
B = (12 - Qv)^(2/3) / 4;
A = 50 + 56*(1 - B);
Kv_3 = (A/(A + sqrt(Vt_3)))^B; %Dynamic Factor
% Tangential load (same for pinion and gear)
Wt_3 = stage_3_torque / (dp_3/2);      % lb
% Bending - pinion 3
KI_3 = 1;
bending_stress_pinion_3=(Wt_3*pd_3*Ka*Km_3*Ks*Kb*KI_3)/(face_width_3*Jp_3*Kv_3)
SF_b_pinion_3=sfb_pinion/bending_stress_pinion_3
% Contact - pinion 3
Ca = Ka;
Cs = Ks;
Cm_3 = Km_3;
Cv_3 = Kv_3;
I_3 = (sind(phi)*cosd(phi)/2) * (Ng_3/(Ng_3+Np_3));
surface_stress_pinion_3 = Cp*sqrt((Wt_3*Ca*Cm_3*Cs*Cf)/(face_width_3*I_3*dp_3*Cv_3))
SF_c_pinion_3 =(sfc_pinion/surface_stress_pinion_3)^2
% Bending - gear 3
KI_g_3 = 1;
Wt_g_3 = Wt_3;
Vt_g_3 = Vt_3;
Kv_g_3 = Kv_3;
bending_stress_gear_3=(Wt_g_3*pd_3*Ka*Km_3*Ks*Kb*KI_g_3)/(face_width_3*Jg_3*Kv_g_3)
SF_b_gear_3 =sfb_gear/bending_stress_gear_3
% Contact - gear 3
surface_stress_gear_3 = Cp*sqrt((Wt_g_3*Ca*Cm_3*Cs*Cf)/(face_width_3*I_3*dg_3*Cv_3))
SF_c_gear_3 = (sfc_gear / surface_stress_gear_3)^2
```